PicSight.com

P202B-Smartx02-AR

Smart GigE color camera

- 1/1.8 inch progressive scan CCD
- 1624 × 1236 square pixels
- 14 fps, 12-bit image data
- high quality bayer decoder
- async reset, full frame shutter
- trigger in, strobe out, video out (CVBS)
- 32-bit RISC processor
- real-time operating system

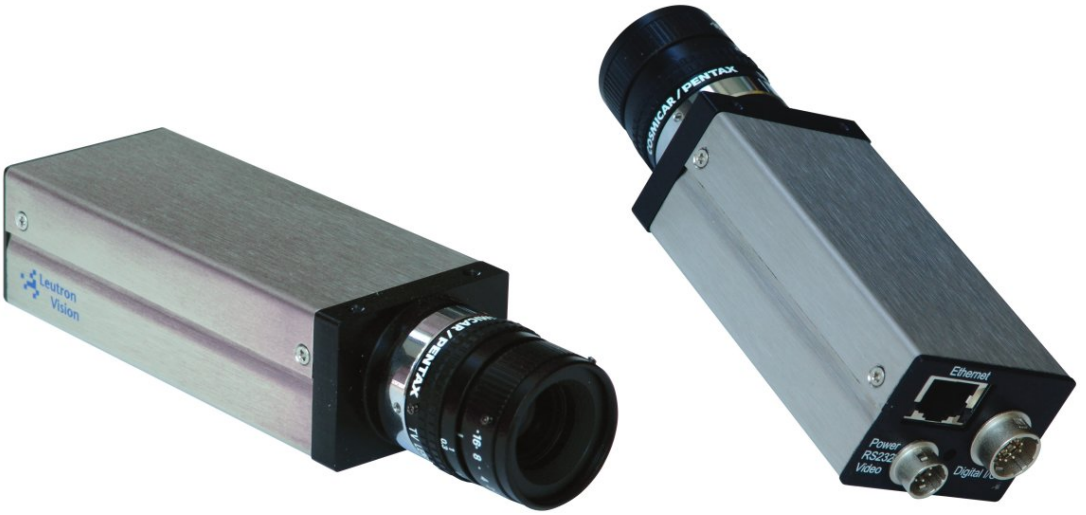

GiGE VISION™

Leutron Vision

PicSight.com P202B-Smartx02-AR

1/1.8" CCD Sensor	SONY ICX274
Readout	interline transfer
Sensor size (H×V)	8.5 × 6.8 mm
Output image resolution (H×V)	1624 × 1236 pixels
Pixel size	4.4 × 4.4 µm
Color	bayer pattern
Scan	progressive
Frame rate	14 frames/sec
Shutter	global
Max. shutter time	20 ms
Min. shutter time	10 µs
Lens mount	C-mount
Optional lens mount	90-degree C-mount
Spectral sensitivity	

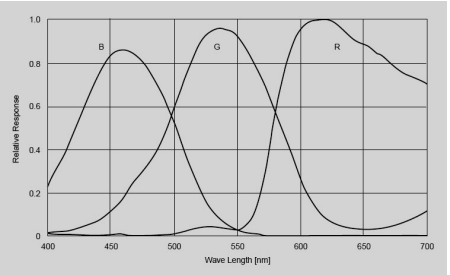

Interface	
Ethernet	10/100/1000 Mbit/sec
Processor — P202B-Smart502-AR	PNX0192/300MHz 64MB RAM, 32MB Flash
Processor — P202B-Smart702-AR	PNX1702/500MHz, Hardware FPU 256MB RAM, 64MB Flash
Digital input	2× Optocoupler, 1× TTL
Digital output	3× Optocoupler, 1× TTL
Power req. 12 V/6W	P202B-Smart (old version)
Power req. 10-26V/5W	P202B-Smartx02-AR
Weight	145 g
Operating temperature	0–50 °C
Realtime function	
FPGA XC3S500E	Bayer decoder, Look up table
Embedded software	
Compiler/OS	C, C++/Real-time OS
Host (PC) software	
GigE Vision	Any GigE Vision API
API LV-SDS	C, C++, OCX, .Net
Configuration	Web interface
Application upload	FTP

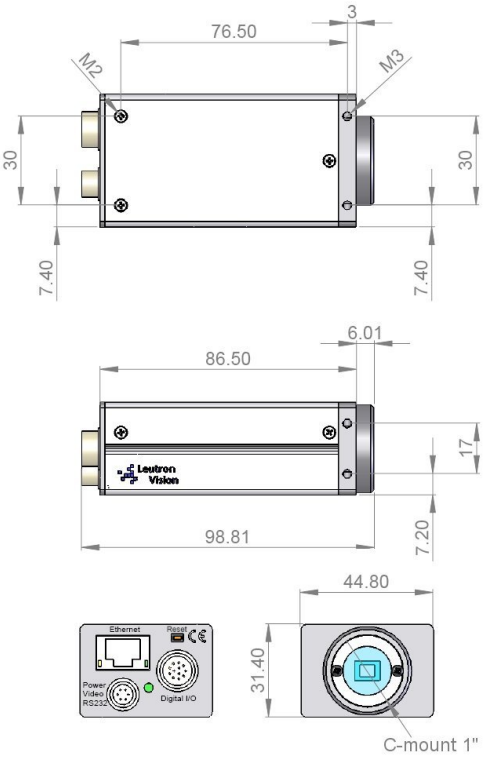

Hirose 12-pin connector, male, HR10A-10R-12PB-71

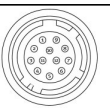

Hirose 6-pin connector, male, HR10A-7R- 6PB-73

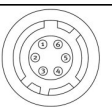

Pin	Signal	Pin	Signal
1	Opto Output Tap	1	TXD Output
2	Opto Output Common Emitter	2	RXD Input
3	Opto Output Collector 0	3	Ground
4	Opto Output Collector 1	4	Video Out (CVBS)
5	Opto Output Collector 2	5	Ground
6	P202B-Smart-Ax: TTL output, P202B-Smart: Opto Output Collector 3	6	Power Input
7	Power Input		
8	Opto Input 1		
9	Opto Input 0		
10	Opto Input Common		
11	Trigger Input TTL		
12	Ground		

Ordering numbers		
Number	Product name	Option
211650	PicSight P202B-Smart702-AR	
211651	PicSight P202B-Smart702-AR-H	90° lens mount
100600	PicSight P202B-Smart502-AR	
100601	PicSight P202B-Smart502-AR-H	90° lens mount
999010	Mounting plate	For GigE/Smart cameras
999020	Mounting plate	For GigE-H/Smart-H cameras
16028	LV-SDS	Software API

International headquarters Switzerland
Leutron Vision AG
Industriestrasse 57
CH-8152 Glattbrugg, Switzerland
Phone ++41 44 809 88 22
fax ++41 44 809 88 29
intsales@leutron.com
www.leutron.com

Germany
Leutron Vision GmbH
Macairestrasse 3
D-78467 Konstanz, Germany
Phone ++49 7531 5942 0
fax ++49 7531 594299
desales@leutron.com
www.leutron-vision.de

North America
Leutron Vision Inc.
25 Mall Road – Suite 300
Burlington, MA 01803, USA
Phone: ++1 888 442 2269 x1
Fax: ++1 781 353 3943
ussales@leutron.com
www.leutron.com/us/

Leutron Vision

Technical specifications may change at any time without prior notice.